Viking Series

10/100/1000Base-T/SX, Auto MDI/MDIx, Autonegotiable MIL-DTL-38999, Unmanaged Ethernet Switch

6 Port (4+2), Flange Mounted

D38999 In-Line 4+2 Port 10/100/1000Base-T/SX Ethernet Switch

FEATURES

- 4x10/100/1000Base-T nonblocking wire speed copper Ethernet ports per IEEE 802.3:2005
- 2x1000Base-SX fiber Ethernet ports per IEEE 802.3:2005
- Electrical cable links up to 100 Meters (EIA/TIA Cat-5E)
- Fiber optic link distances up to 550 Meters per IEEE 802.3
- Operating temperature range from -40°C to +85°C
- Jumbo frame support in all speeds (10/100/1000 Mbps)
- Full duplex flow control per IEEE Std 802.3x and half duplex back pressure, symmetric and asymmetric
- Shock, vibration and immersion resistant per MIL-STD-810
- OD-CD, NI or ZN-NI plating options for enhanced corrosion resistance
- Aluminum connector shells and housing are strong, durable and light weight
- Auto sensing of half or full duplex operation

APPLICATIONS

Viking series 4+2 port Ethernet switches enable high speed network communications in harsh environments.

- Civil and military vehicle networking
- Aerospace and naval platform networks
- Unmanaged Ethernet switch applications

The MIL-DTL-38999, Series III connectors provide a sealed interface that is water-tight to Mil-Std-810 when mated.

DESCRIPTION

Viking series 10/100/1000Base-T/SX unmanaged Ethernet switches consist of 4x10/100/1000Base-T ports plus 2x1000Base-SX ports in a wall or floor mounted inline MIL-DTL-38999 connector assembly.

The Viking series Ethernet switch offers two separate D38999 Ethernet connector interfaces. One interface is a D38999/19-35 with 4x10/100/1000Base-T Ethernet ports compliant with IEEE-802.3U:2005 plus the 28VDC interface. The other interface is a D38999/19-11 with 2x1000Base-SX Ethernet fiber optic ports per IEEE-802.3U:2005.

The Viking 4+2 port Ethernet switch is a highly integrated and extremely rugged solution for vehicle and mobile networking applications. Its small size, light weight and low power requirements make it an excellent fit for next generation networks.

Viking series 10/100/1000Base-T/SX Ethernet switches are vibration isolated, environmentally hardened components designed for use in harsh environment applications.

- Sealed against liquid and solid contaminants
- Shock and vibration resistant

ORDERING INFORMATION

Application	Product Number
10/100/1000Base-T/SX - 28VDC	V42F-6SAT-FW

See Appendix A2 for more part number options

MOOG PROTOKRAFT

V42F-6SAT-FW-DS - November 2, 2012

Six Port (4+2) Viking Series D38999,
10/100/1000Base-T / SX Unmanaged Ethernet Switch

ABSOLUTE MAXIMUM RATINGS

Absolute maximum limits mean that no catastrophic damage will occur if the product is subjected to these ratings for short periods, provided each limiting parameter is in isolation and all other parameters have values within the performance specification. It should not be assumed that limiting values of more than one parameter can be applied to the product at the same time.

Parameter	Symbol	Minimum	Typical	Maximum	Unit
Storage Temperature	T_S	-55		+100	°C

RECOMMENDED OPERATING CONDITIONS

Parameter	Symbol	Minimum	Typical	Maximum	Unit
Operating Temperature	T_A	-40		+85	°C
Supply Voltage	V_{CC}	+18.0	28.0	+36.0	V
Power Supply Noise (p-p)	N_P			200	mV

INTERFACE SPECIFICATIONS COMPLIANCE

Requirement	Feature	Condition	Notes
MIL-STD-883	ESD	Class II	2200V
MIL-STD-810	Vibration	$3.8g^2/Hz$	43G rms
MIL-STD-810	Shock	40.0g	6-9mS
MIL-STD-810	Immersion	1.0 meter	2 .0Hours
MIL-STD-1344	Flame Resistance	Method 1012	30 Seconds
MIL-STD-1344	Damp Heat	10 Cycles	24 Hours
FDA / CDRH / IEC-825-1	Eye Safety	Class 1	No Safety Interlocks Required

MATERIALS

Item	Detail	Notes
Shell and housing	Aluminum Alloy	
Plating	OD-CD, NI or ZN-NI	
Insert	Thermoplastic	
Interfacial Seal	Elastomer	
Alignment Sleeves	Composite Polymer	

4545 West Stone Drive, Kingsport, TN 37660 USA PH: +1.423.578.7200 FX: +1.423.578.7201 EM: info1@protokraft.com Web: www.protokraft.com

Six Port (4+2) Viking Series D38999,
10/100/1000Base-T / SX Unmanaged Ethernet Switch

OPTICAL TRANSMITTERS T_A = Operating Temperature Range

Parameter	Symbol	Minimum	Typical	Maximum	Unit
Optical Output Power	P_o	-9.5		-4.0	dBm
Optical Output Wavelength	λ_{OUT}	830	850	860	nM
Spectral Width	$\Delta\lambda_{RMS}$			0.85	nM

OPTICAL RECEIVERS T_A = Operating Temperature Range

Parameter	Symbol	Minimum	Typical	Maximum	Unit
Optical Sensitivity	P_I	-17.0		-2.0	dBm
Optical Wavelength	λ_{IN}	830	850	860	nM

POWER SUPPLY CURRENT T_A = Operating Temperature Range

Parameter	Symbol	Minimum	Typical	Maximum	Unit
Supply Current per Port @ 28VDC	I_{CCT}		150	200	mA

OPTICAL LINK DISTANCES

Protocol	Cable Specification	Distance
Gigabit Ethernet - IEEE-802.3:2005 - 1000BASE-SX	62.5/125µ 200MHz*Km	275M
	50/125µ 500MHz*Km	550M

COPPER LINK DISTANCES

Protocol	Cable Specification	Distance
Gigabit Ethernet - IEEE-802.3:2005 - 1000BASE-T	TIA/EIA-568-B Cat 5E - for other transmission media, please consult the factory	100M

4545 West Stone Drive, Kingsport, TN 37660 USA PH: +1.423.578.7200 FX: +1.423.578.7201 EM: info1@protokraft.com Web: www.protokraft.com

Six Port (4+2) Viking Series D38999,
10/100/1000Base-T / SX Unmanaged Ethernet Switch

OUTLINE DRAWING

Dimensions are shown as: inches (mm)

J1
D38999/20xF35PN

J2
D38999/20xF11SN Equiv.

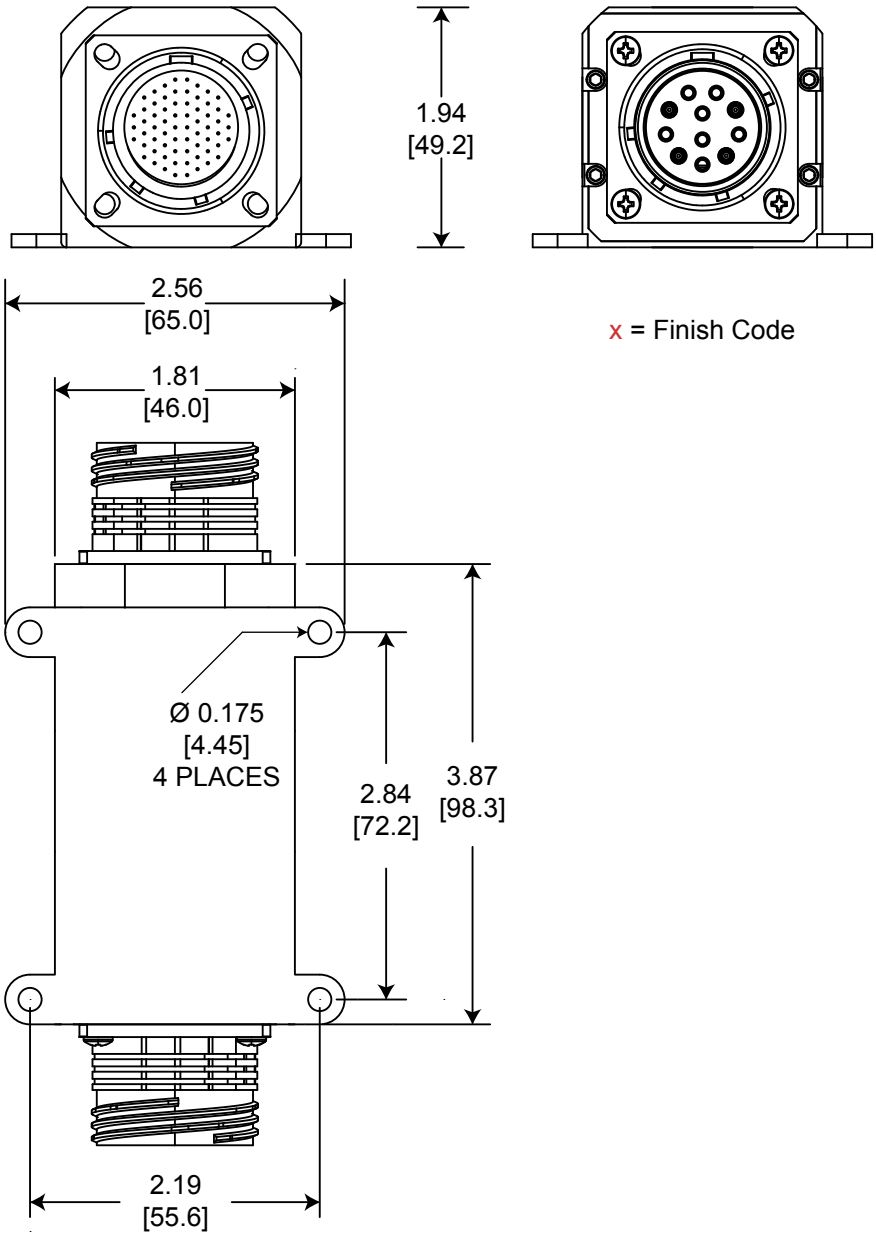

x = Finish Code

PORT / FUNCTION ASSIGNMENTS

Port #	Function
J1	4x10/100/1000Base-T + 28VDC
J2	2x1000Base-SX or 100Base-FX

MOOG PROTOKRAFT

V42F-6SAT-FW-DS - November 2, 2012

Six Port (4+2) Viking Series D38999,
10/100/1000Base-T / SX Unmanaged Ethernet Switch

J1 PIN FUNCTIONS
ETHERNET PORT AND PIN ASSIGNMENTS
TOP

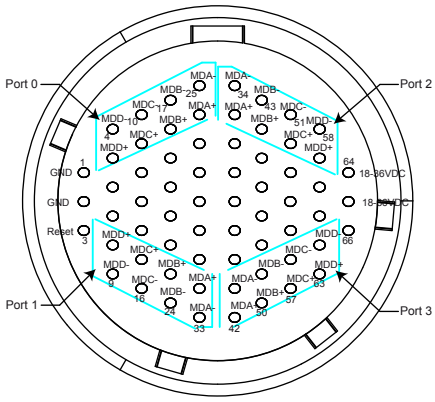

Front view of the J1 connector shown - mating cable plug opposite - see J1 D38999 Pin Function Chart for details

PORT #	PIN #	FUNCTION	PORT #	PIN #	FUNCTION
0	26	MDA+	2	35	MDA+
	25	MDA-		34	MDA-
	18	MDB+		44	MDB+
	17	MDB-		43	MDB-
	11	MDC+		52	MDC+
	10	MDC-		51	MDC-
	5	MDD+		59	MDD+
	4	MDD-		58	MDD-
1	32	MDA+	3	42	MDA+
	33	MDA-		41	MDA-
	23	MDB+		50	MDB+
	24	MDB-		49	MDB-
	15	MDC+		57	MDC+
	16	MDC-		56	MDC-
	8	MDD+		63	MDD+
	9	MDD-		62	MDD-

4545 West Stone Drive, Kingsport, TN 37660 USA PH: +1.423.578.7200 FX: +1.423.578.7201 EM: info1@protokraft.com Web: www.protokraft.com

Six Port (4+2) Viking Series D38999,
10/100/1000Base-T / SX Unmanaged Ethernet Switch

J1 / D38999/20xF35PN ELECTRICAL PIN FUNCTIONS - Continued on next page

Pin #	Port #	Function	RJ-45 Eq. Pin #	Logic Family
1	N/A	GND	N/A	Isolated from Case GND
2	N/A	GND	N/A	Isolated from Case GND
3	N/A	GND	N/A	Isolated from Case GND
4	0	MDD-	8	IEEE-802.3.2005 10/100/1000Base-T
5	0	MDD+	7	IEEE-802.3.2005 10/100/1000Base-T
6	N/A	N/C	N/A	Do Not Connect - Factory Use Only
7	N/A	N/C	N/A	Do Not Connect - Factory Use Only
8	1	MDD+	7	IEEE-802.3.2005 10/100/1000Base-T
9	1	MDD-	8	IEEE-802.3.2005 10/100/1000Base-T
10	0	MDC-	5	IEEE-802.3.2005 10/100/1000Base-T
11	0	MDC+	4	IEEE-802.3.2005 10/100/1000Base-T
12	N/A	N/C	N/A	Do Not Connect - Factory Use Only
13	N/A	N/C	N/A	Do Not Connect - Factory Use Only
14	N/A	N/C	N/A	Do Not Connect - Factory Use Only
15	1	MDC+	4	IEEE-802.3.2005 10/100/1000Base-T
16	1	MDC-	5	IEEE-802.3.2005 10/100/1000Base-T
17	0	MDB-	6	IEEE-802.3.2005 10/100/1000Base-T
18	0	MDB+	3	IEEE-802.3.2005 10/100/1000Base-T
19	N/A	N/C	N/A	Do Not Connect - Factory Use Only
20	N/A	N/C	N/A	Do Not Connect - Factory Use Only
21	N/A	GND	N/A	Isolated from Case GND
22	N/A	N/C	N/A	Do Not Connect - Factory Use Only
23	1	MDB+	3	IEEE-802.3.2005 10/100/1000Base-T
24	1	MDB-	6	IEEE-802.3.2005 10/100/1000Base-T
25	0	MDA-	2	IEEE-802.3.2005 10/100/1000Base-T
26	0	MDA+	1	IEEE-802.3.2005 10/100/1000Base-T
27	N/A	N/C	N/A	Do Not Connect - Factory Use Only
28	N/A	N/C	N/A	Do Not Connect - Factory Use Only
29	N/A	N/C	N/A	Do Not Connect - Factory Use Only
30	N/A	N/C	N/A	Do Not Connect - Factory Use Only
31	N/A	N/C	N/A	Do Not Connect - Factory Use Only
32	1	MDA+	1	IEEE-802.3.2005 10/100/1000Base-T
33	1	MDA-	2	IEEE-802.3.2005 10/100/1000Base-T
34	2	MDA-	2	IEEE-802.3.2005 10/100/1000Base-T

4545 West Stone Drive, Kingsport, TN 37660 USA PH: +1.423.578.7200 FX: +1.423.578.7201 EM: info1@protokraft.com Web: www.protokraft.com

Six Port (4+2) Viking Series D38999,
10/100/1000Base-T / SX Unmanaged Ethernet Switch

J1 / D38999/20xF35PN ELECTRICAL PIN FUNCTIONS - Continued from previous page

Pin #	Port #	Function	RJ-45 Eq. Pin #	Logic Family
35	2	MDA+	1	IEEE-802.3.2005 10/100/1000Base-T
36	N/A	N/C	N/A	Do Not Connect - Factory Use Only
37	N/A	N/C	N/A	Do Not Connect - Factory Use Only
38	N/A	N/C	N/A	Do Not Connect - Factory Use Only
39	N/A	N/C	N/A	Do Not Connect - Factory Use Only
40	N/A	N/C	N/A	Do Not Connect - Factory Use Only
41	3	MDA-	2	IEEE-802.3.2005 10/100/1000Base-T
42	3	MDA+	1	IEEE-802.3.2005 10/100/1000Base-T
43	2	MDB-	6	IEEE-802.3.2005 10/100/1000Base-T
44	2	MDB+	3	IEEE-802.3.2005 10/100/1000Base-T
45	N/A	N/C	N/A	Do Not Connect - Factory Use Only
46	N/A	N/C	N/A	Do Not Connect - Factory Use Only
47	N/A	N/C	N/A	Do Not Connect - Factory Use Only
48	N/A	N/C	N/A	Do Not Connect - Factory Use Only
49	3	MDB-	6	IEEE-802.3.2005 10/100/1000Base-T
50	3	MDB+	3	IEEE-802.3.2005 10/100/1000Base-T
51	2	MDC-	5	IEEE-802.3.2005 10/100/1000Base-T
52	2	MDC+	4	IEEE-802.3.2005 10/100/1000Base-T
53	N/A	N/C	N/A	Do Not Connect - Factory Use Only
54	N/A	N/C	N/A	Do Not Connect - Factory Use Only
55	N/A	N/C	N/A	Do Not Connect - Factory Use Only
56	3	MDC-	5	IEEE-802.3.2005 10/100/1000Base-T
57	3	MDC+	4	IEEE-802.3.2005 10/100/1000Base-T
58	2	MDD-	8	IEEE-802.3.2005 10/100/1000Base-T
59	2	MDD+	7	IEEE-802.3.2005 10/100/1000Base-T
60	N/A	N/C	N/A	Do Not Connect - Factory Use Only
61	N/A	N/C	N/A	Do Not Connect - Factory Use Only
62	3	MDD-	8	IEEE-802.3.2005 10/100/1000Base-T
63	3	MDD+	7	IEEE-802.3.2005 10/100/1000Base-T
64	ALL	VCC	N/A	18-36VDC
65	ALL	VCC	N/A	18-36VDC
66	N/A	N/C	N/A	Do Not Connect - Factory Use Only

4545 West Stone Drive, Kingsport, TN 37660 USA PH: +1.423.578.7200 FX: +1.423.578.7201 EM: info1@protokraft.com Web: www.protokraft.com

Six Port (4+2) Viking Series D38999,
10/100/1000Base-T / SX Unmanaged Ethernet Switch

J2 PIN FUNCTIONS
ETHERNET PORT AND PIN ASSIGNMENTS
TOP

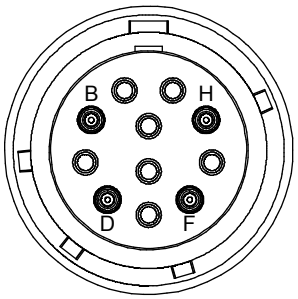

Front view of the D38999 optical insert shown, fiber optic cable plug opposite - see Appendix A1 for details

MIL-DTL-38999 OPTICAL INTERFACE

PORT NUMBER	TX	RX
4	**H**	**F**
5	**B**	**D**

4545 West Stone Drive, Kingsport, TN 37660 USA PH: +1.423.578.7200 FX: +1.423.578.7201 EM: info1@protokraft.com Web: www.protokraft.com

Six Port (4+2) Viking Series D38999,
10/100/1000Base-T / SX Unmanaged Ethernet Switch

APPENDIX A1

MIL-DTL-38999 FIBER OPTIC CABLE PLUG / MIL-T-29504 PIN TERMINI

*See DSCC or SAE QPL for Approved Suppliers
http://www.dscc.dla.mil/programs/qmlqpl/QPLdetail.asp?QPL=38999

*D38999 PLUG - PIN INSERT

MIL-DTL-38999 CABLE PLUG	
MS PLUG P/N	*D38999/26WF11PN

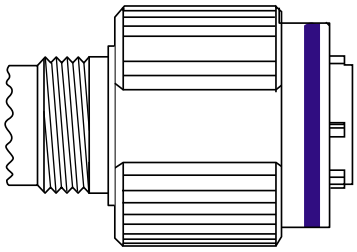

*FIBER OPTIC PIN TERMINUS

MIL-T-29504 PIN TERMINUS	
MS PIN TERMINUS P/N	*M29504/04-xxxx**

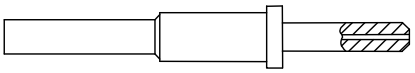

**defined by fiber optic cable configuration

*CABLE PROTECTION CAP

D38999/32 PLUG PROTECTION CAP	
MS PLUG CAP P/N	*D38999/32W19N

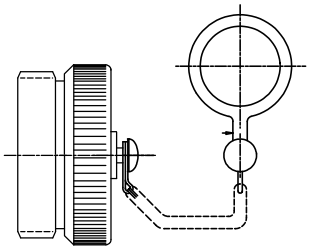

D38999 PLUG PORT FUNCTIONS

PORT NUMBER	TX	RX
4	H	F
5	B	D

TOP
Optical Cable Plug Interface

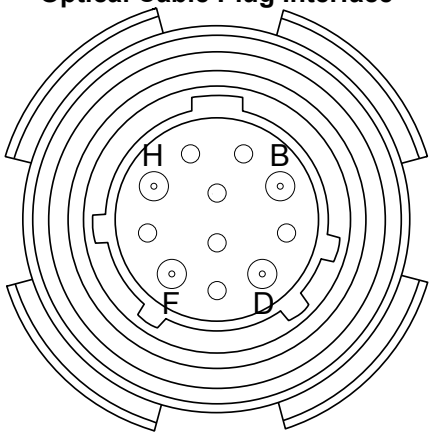

Front face of the optical cable plug pin insert shown. Transceiver insert opposite.

*CABLE BACKSHELL

MIL-C-85049 CABLE BACKSHELL	
MS BACKSHELL P/N	*MS85049/xxxxxx**

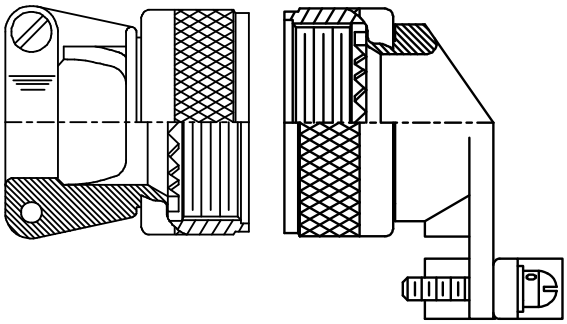

**Straight or angled backshell - defined by application / mounting configuration

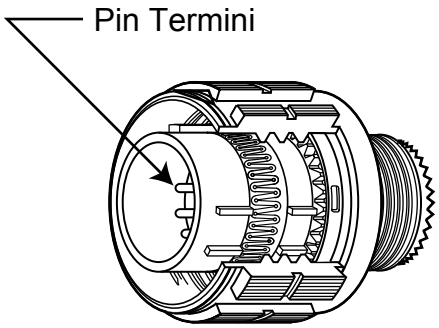

Six Port (4+2) Viking Series D38999,
10/100/1000Base-T / SX Unmanaged Ethernet Switch

APPENDIX A2

PART NUMBER OPTIONS

In-Line, Six (4+2) Port, 10/100/1000Base-T / SX, Unmanaged Ethernet Switch

V42 F - 6 S A T - F x

Product Function
V42= Inline Ethernet Switch

Shell Configuration
F = Flange Mount

# of Ports
6 = 4+2

CABLE
S= 1000Base-SX

Power Supply Voltage
A = 28.0VDC

Electrical Interface
T = 10/100/1000Base-T

D38999 Shell Size
F = 19-35 / 11

Shell Plating
F = NI
W = OD CD / NI
Z = ZN / NI

Other mounting and interface options are available.
Please consult the Protokraft website for alternate configurations.