PROTOKRAFT

Facilitating Secure Communications in Harsh Environments

Lightning Series

MIL-DTL-38999 Optical Transmitters, ARINC 818 & sFPDP Applications, Multimode, 850nM VCSELs

Octal Port Transmitter, Receptacle

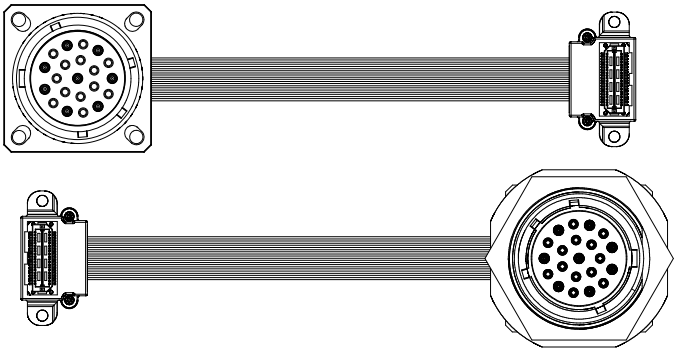

Eight TX Channels Operating from 50Mbps to 3.2Gbps

FEATURES

- Suitable for ARINC 818, sFPDP and other applications from 50Mbps to 3.2Gbps
- Optical fiber link distances up to 550 Meters (50/125µ 500MHz*Km MMF)
- Maximum optical channel bit error rate less than $1x10^{-12}$
- Operating temperature range from -40°C to +85°C
- Shock, vibration and immersion resistant per MIL-STD-810
- Olive drab cadmium over electroless nickel plating meets stringent corrosion resistance requirements
- Aluminum alloy MIL-DTL-38999 housings are strong, durable, and light weight
- MIL-T-29504 compliant optical fiber connector interface
- Samtec EQCD Series electrical connector for SMT interface

APPLICATIONS

Lightning series bulkhead mounted optical transmitters enable high speed network communications over long distances in harsh environments.

- sFPDP data links
- ARINC 818 Video displays and drivers

The MIL-DIL-38999, Series III shell provides a sealed optical interface that is water-tight to MIL-STD-810 / IP67 / NEMA-4x when mated.

The multimode optical fiber interface supports applications where copper cable link distance, bandwidth, weight or bulk make the use of twisted pair, twinax or quadrax copper conductors unacceptable.

DESCRIPTION

Lightning series optical fiber transmitters consist of optoelectronic transmitter functions integrated into a bulkhead mounted MIL-DTL-38999, Series III receptacle connector. The optical transmitters are 850nm VCSEL lasers. The transmitter input lines are driven with differential CML signals applied to the transmitter (TX+ and TX-) lines. Dual loop, temperature compensated, VCSEL drivers convert the transmitter input signals to suitable VCSEL bias and modulation currents.

The electrical interface to the Lightning series optical transmitters is a ribbon coax to Samtec EQCD high density cable assembly enabling SMT interconnection to a customer's backplane, motherboard or daughtercard.

Lightning series optical fiber transmitters are vibration isolated, environmentally hardened components designed for use in harsh environment applications.

ORDERING INFORMATION

Application	Part Number
50Mbps to 2.49Gbps, Flange	P38F-8T1D-HW-Lxxx
2.5Gbps to 3.2Gbps, Flange	P38F-8T1E-HW-Lxxx
50Mbps to 2.49Gbps, Jam Nut	P38J-8T1D-HW-Lxxx
2.5Gbps to 3.2Gbps, Jam Nut	P38J-8T1E-HW-Lxxx

See page 6 for standard part number / cable length options

4545 West Stone Drive, Kingsport, TN 37660 ☎+1.423.578.7200 🖷+1.423.578.7201 ✉info1@protokraft.com 🏠http://www.protokraft.com

ABSOLUTE MAXIMUM RATINGS

Absolute maximum limits mean that no catastrophic damage will occur if the product is subjected to these ratings for short periods, provided each limiting parameter is in isolation and all other parameters have values within the performance specification. It should not be assumed that limiting values of more than one parameter can be applied to the product at the same time.

Parameter	Symbol	Minimum	Typical	Maximum	Unit
Storage Temperature	T_S	-55		+100	°C
Supply Voltage	V_{CC}	-0.5		+4.5	V
Data Input Voltage	V_I	-0.5		V_{CC}	V
Differential Input Voltage (p-p)	V_D			2.0	V

RECOMMENDED OPERATING CONDITIONS

Parameter	Symbol	Minimum	Typical	Maximum	Unit
Operating Temperature	T_A	-40		+85	°C
Supply Voltage	V_{CC}	+3.135		+3.465	V
Power Supply Noise (p-p)	N_P			200	mV

SPECIFICATIONS COMPLIANCE

Requirement	Feature	Condition	Notes
MIL-STD-883	ESD	Class II	2200V
MIL-STD-810	Vibration	$3.8g^2/Hz$	43G rms
MIL-STD-810	Shock	40.0g	6-9mS
MIL-STD-810	Immersion	1.0 meter	2 .0Hours
MIL-STD-1344	Flame Resistance	Method 1012	30 Seconds
MIL-STD-1344	Damp Heat	10 Cycles	24 Hours
MIL-STD-38999	Mating Durability	500 Cycles	<0.5dB Change
MIL-STD 810	Salt Fog	7 Days	5 wt. %
FDA / CDRH / IEC-825-1	Eye Safety	Class 1	No Safety Interlocks Required

MATERIALS

Item	Detail	Notes
Shell	Aluminum Alloy	
Shell Plating	Olive Drab Cadmium over Nickel	QQ-P-416, QQ-N-290
Insert	Thermoplastic	
Interfacial Seal	Elastomer	
Alignment Sleeves	Composite Polymer	
Printed Circuits	Polyimide / FR-4	Mil-P-31032 Type 4

4545 West Stone Drive, Kingsport, TN 37660 ☎+1.423.578.7200 🖷+1.423.578.7201 ✉info1@protokraft.com 🏠http://www.protokraft.com

OPTICAL TRANSMITTERS T_A = Operating Temperature Range, V_{CC} = 3.135V to 3.465V

Parameter	Symbol	Minimum	Typical	Maximum	Unit
Optical Output Power (BER<10^{-12})	P_o	-9.5		-4.0	dBm
Optical Output Wavelength	λ_{OUT}	830	850	860	nM
Spectral Width	$\Delta\lambda_{RMS}$			0.85	nM
Extinction Ratio	ER	9.0	11.0		dB
Optical Rise, Fall Time (20% to 80%)	$t_{R,F}$			150	pS

POWER SUPPLY CURRENT T_A = Operating Temperature Range, V_{CC} = 3.135V to 3.465V

Parameter	Symbol	Minimum	Typical	Maximum	Unit
Supply Current per TX	I_{CCT}		90	120	mA

4545 West Stone Drive, Kingsport, TN 37660 ☎+1.423.578.7200 🖷+1.423.578.7201 ✉info1@protokraft.com 🏠http://www.protokraft.com

Octal Port Lightning Series MIL-DTL-38999 Optical Transmitters
50Mbps to 3.2Gbps ARINC 818 & sFPDP Applications, Multimode, 850nM VCSELs

OUTLINE DRAWING

Flange Mount Option

Dimensions are shown as: inches [mm]

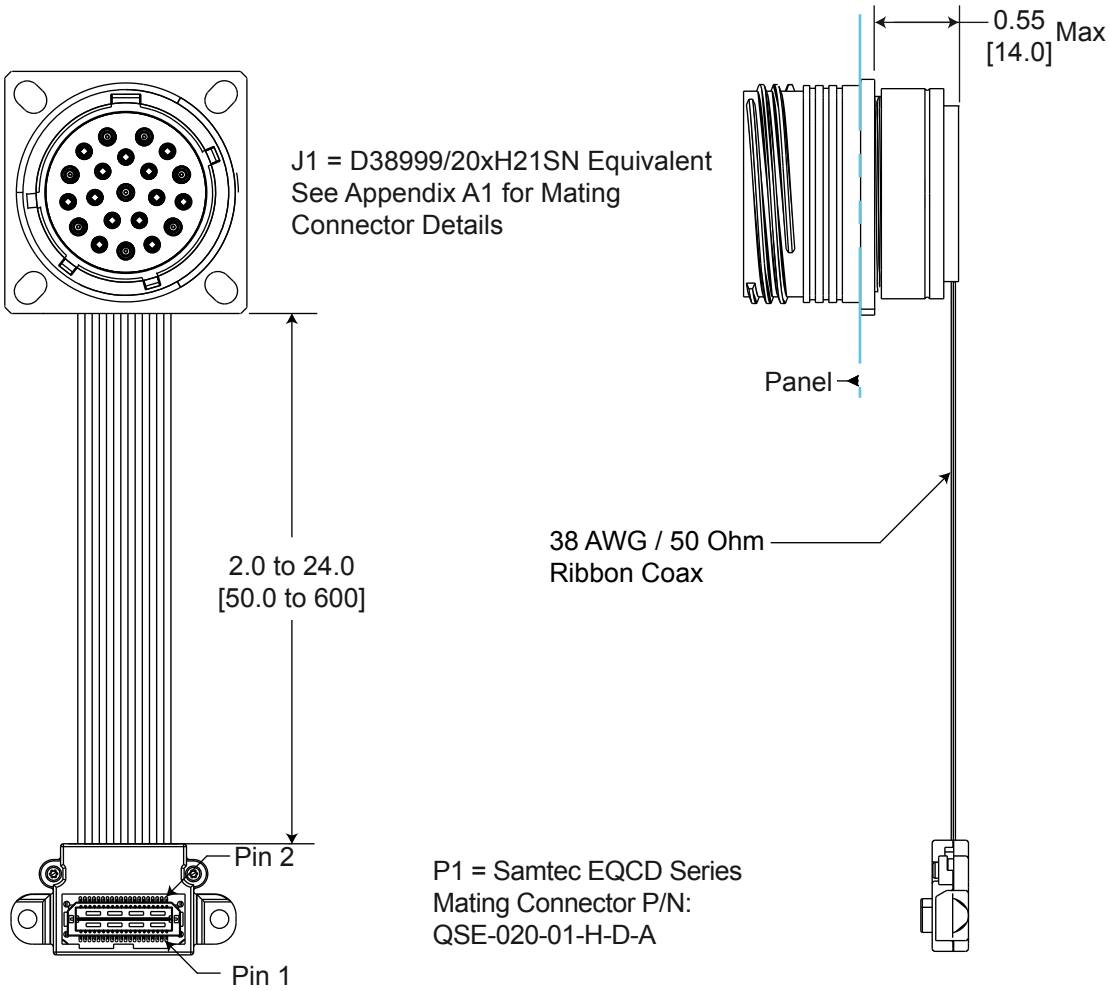

Panel Cutout Dimensions

Rear Panel Mounting Only

Shell Size Code	Shell Size	M Min	P Holes	R Bsc
H	23	1.547 [39.29]	0.159 [4.0] / 0.149 [3.8]	1.375 [34.9]

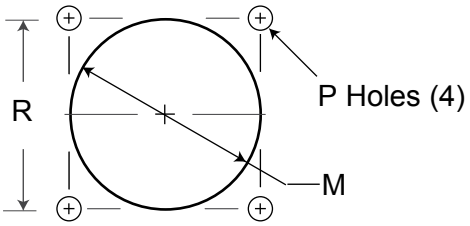

Part Number = *P38F-xxxx-Hx-Lxxx

*see page 6 for part number / cable length options and page 12 for complete ordering options

4545 West Stone Drive, Kingsport, TN 37660 ☎+1.423.578.7200 🖷+1.423.578.7201 ✉info1@protokraft.com 🏠http://www.protokraft.com

Octal Port Lightning Series MIL-DTL-38999 Optical Transmitters
50Mbps to 3.2Gbps ARINC 818 & sFPDP Applications, Multimode, 850nM VCSELs

OUTLINE DRAWING

Jam Nut Option

Dimensions are shown as: inches [mm]

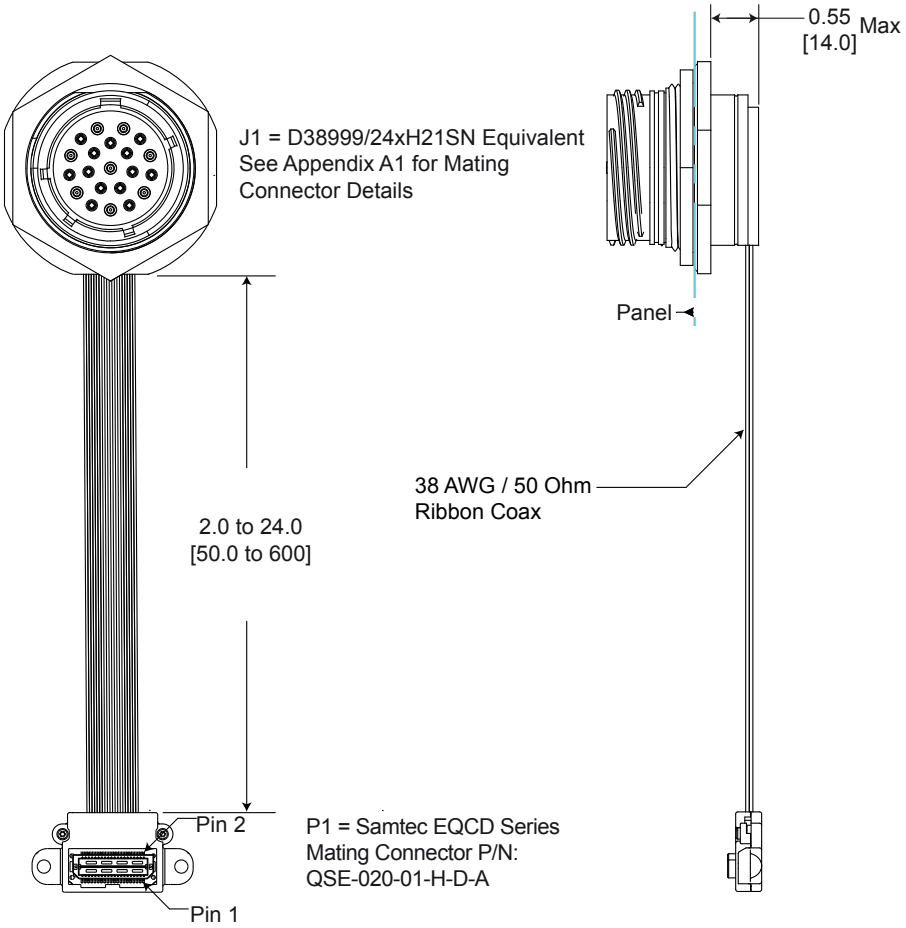

Panel Cutout Dimensions

Shell Size Code	Shell Size	D1 Min	D2 Min
H	23	1.635 [41.53]	1.585 [40.26]

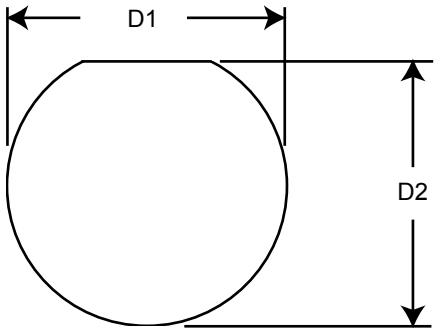

Part Number = *P38J-xxxx-Hx-Lxxx

*see page 6 for part number / cable length options and page 12 for complete ordering options

4545 West Stone Drive, Kingsport, TN 37660 ☎+1.423.578.7200 🖷+1.423.578.7201 ✉info1@protokraft.com 🏠http://www.protokraft.com

OUTLINE DRAWING

Cable Length Options

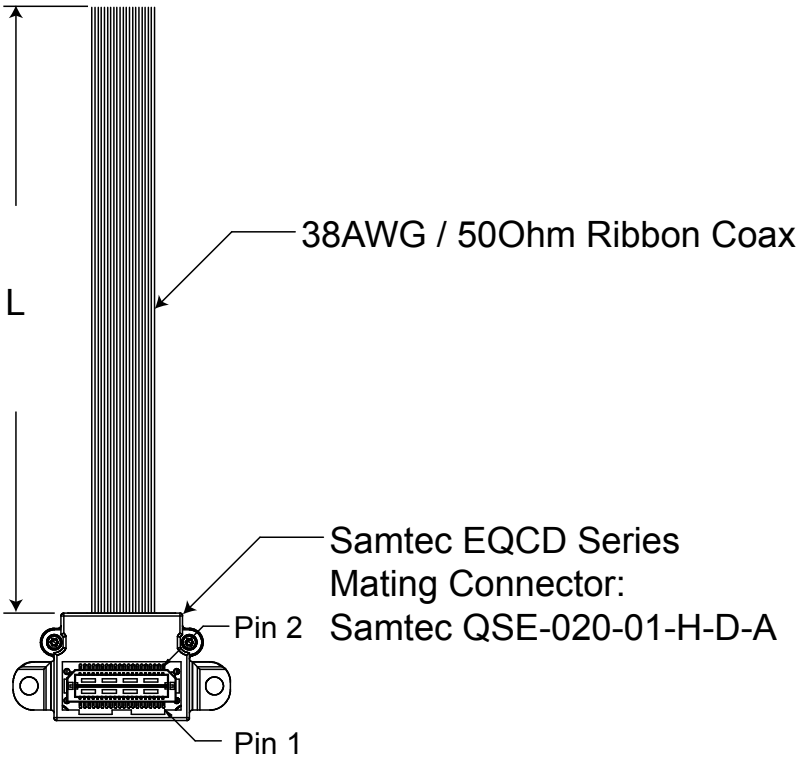

Ribbon Coax Cable Length Options

L (mm) +/- 6.0	ITEM #
50	xxxx-xxxx-xx-L050
100	xxxx-xxxx-xx-L100
150	xxxx-xxxx-xx-L150
200	xxxx-xxxx-xx-L200
250	xxxx-xxxx-xx-L250

4545 West Stone Drive, Kingsport, TN 37660 ☎+1.423.578.7200 🖷+1.423.578.7201 ✉info1@protokraft.com 🏠http://www.protokraft.com

J1 D38999 PIN and PORT ASSIGNMENTS

TOP
Optical Interface

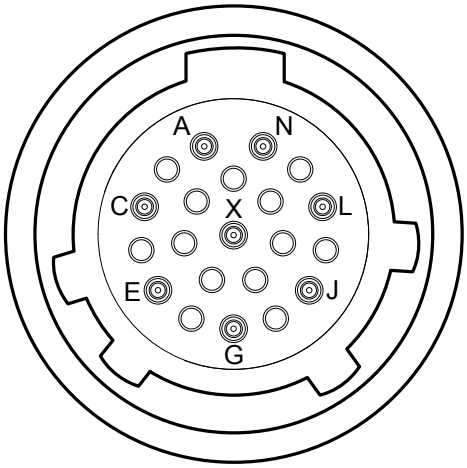

Front view of the D38999 optical insert shown, fiber optic cable plug opposite - see Appendix A1 for details

MIL-DTL-38999 OPTICAL INTERFACE

PORT NUMBER	PIN NUMBER
0	**L**
1	**J**
2	**G**
3	**N**
4	**X**
5	**A**
6	**E**
7	**C**

4545 West Stone Drive, Kingsport, TN 37660 ☎+1.423.578.7200 🖷+1.423.578.7201 ✉info1@protokraft.com 🏠http://www.protokraft.com

Octal Port Lightning Series MIL-DTL-38999 Optical Transmitters
50Mbps to 3.2Gbps ARINC 818 & sFPDP Applications, Multimode, 850nM VCSELs

PRINTED CIRCUIT BOARD FOOTPRINT

All dimensions shown are for reference only: inches [mm]

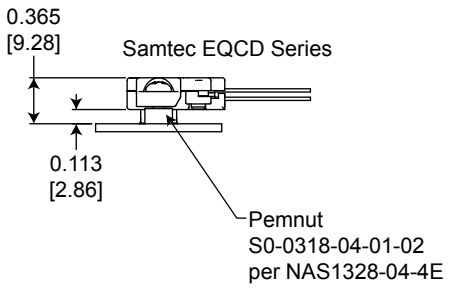

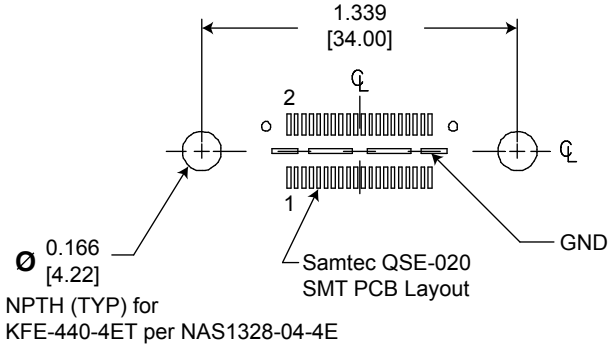

SAMTEC EQCD PIN ASSIGNMENTS - Continued on the next page

ELECTRICAL			PORT #	OPTICAL	
PIN #	FUNCTION	LOGIC FAMILY		PIN #	FUNCTION
1	NC	NA	NA	NA	NA
2	GND	N/A	0-7	ALL	TX
3	TX-	CML	0	L	TX
4	TX_Fault	Open Drain CMOS	0-7	ALL	TX
5	TX+	CML	0	L	TX
6	TX_Dis	CMOS	0-7	ALL	TX
7	TX-	CML	1	J	TX
8	V_{CC}	N/A	0-7	ALL	TX
9	TX+	CML	1	J	TX
10	V_{CC}	N/A	0-7	ALL	TX
11	NC	NA	NA	NA	NA
12	GND	N/A	0-7	ALL	TX
13	TX-	CML	2	G	TX
14	GND	N/A	0-7	ALL	TX
15	TX+	CML	2	G	TX
16	GND	N/A	0-7	ALL	TX
17	TX-	CML	3	N	TX
18	V_{CC}	N/A	0-7	ALL	TX
19	TX+	CML	3	N	TX
20	V_{CC}	N/A	0-7	ALL	TX

Center slug is Ground.
For the Transmitter Fault (TX_Fault) Function: Satisfactory Operation: Logic “0” Output / Internal Fault: Logic “1” Output.
The TX_Fault function is asserted upon an internal fault condition in any of the transmitters.
For theTransmitter Disable (TX_Dis) Function: Logic 1 Input: Disable Optical Output / Logic 0 Input: Enable Optical Output.
All Transmitters are disabled upon assertion of the TX_Dis function.
The TX_Dis function has internal 4.7KΩ to 10.0KΩ pullups.
All CML functions are internally AC coupled with 100Ω differential termination.

4545 West Stone Drive, Kingsport, TN 37660 ☎+1.423.578.7200 🖷+1.423.578.7201 ✉info1@protokraft.com 🏠http://www.protokraft.com

PRINTED CIRCUIT BOARD FOOTPRINT

All dimensions shown are for reference only: inches [mm]

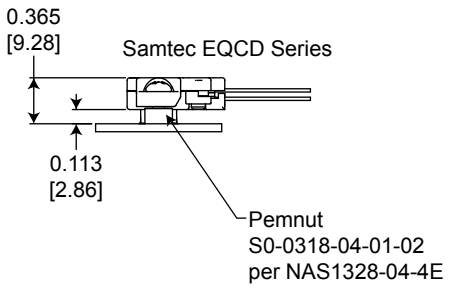

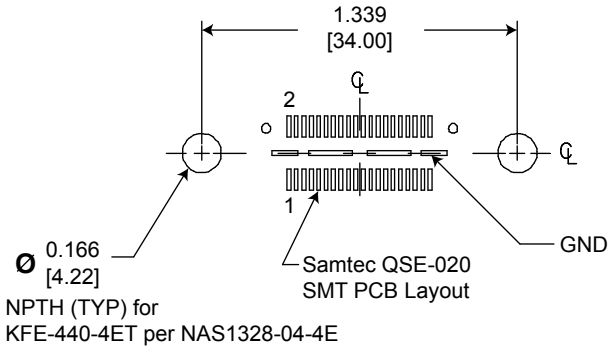

SAMTEC EQCD PIN ASSIGNMENTS - Continued from the previous page

ELECTRICAL			PORT #	ELECTRICAL	
PIN #	FUNCTION	LOGIC FAMILY		PIN #	FUNCTION
21	NC	NA	NA	NA	NA
22	GND	NA	0-7	ALL	TX
23	TX-	CML	4	X	TX
24	GND	NA	0-7	ALL	TX
25	TX+	CML	4	X	TX
26	GND	NA	0-7	ALL	TX
27	TX-	CML	5	A	TX
28	V_{CC}	NA	0-7	ALL	TX
29	TX+	CML	5	A	TX
30	V_{CC}	N/A	0-7	ALL	TX
31	NC	NA	NA	NA	NA
32	GND	NA	0-7	ALL	TX
33	TX-	CML	6	E	TX
34	GND	NA	0-7	ALL	TX
35	TX+	CML	6	E	TX
36	GND	NA	0-7	ALL	TX
37	TX-	CML	7	C	TX
38	V_{CC}	NA	0-7	ALL	TX
39	TX+	CML	7	C	TX
40	V_{CC}	NA	0-7	ALL	TX

Center slug is Ground.
For the Transmitter Fault (TX_Fault) Function: Satisfactory Operation: Logic “0” Output / Internal Fault: Logic “1” Output.
The TX_Fault function is asserted upon an internal fault condition in any of the transmitters.
For theTransmitter Disable (TX_Dis) Function: Logic 1 Input: Disable Optical Output / Logic 0 Input: Enable Optical Output.
All Transmitters are disabled upon assertion of the TX_Dis function.
The TX_Dis function has internal 4.7KΩ to 10.0KΩ pullups.
All CML functions are internally AC coupled with 100Ω differential termination.

4545 West Stone Drive, Kingsport, TN 37660 ☎+1.423.578.7200 🖷+1.423.578.7201 ✉info1@protokraft.com 🏠http://www.protokraft.com

Octal Port Lightning Series MIL-DTL-38999 Optical Transmitters
50Mbps to 3.2Gbps ARINC 818 & sFPDP Applications, Multimode, 850nM VCSELs

APPLICATION SCHEMATIC

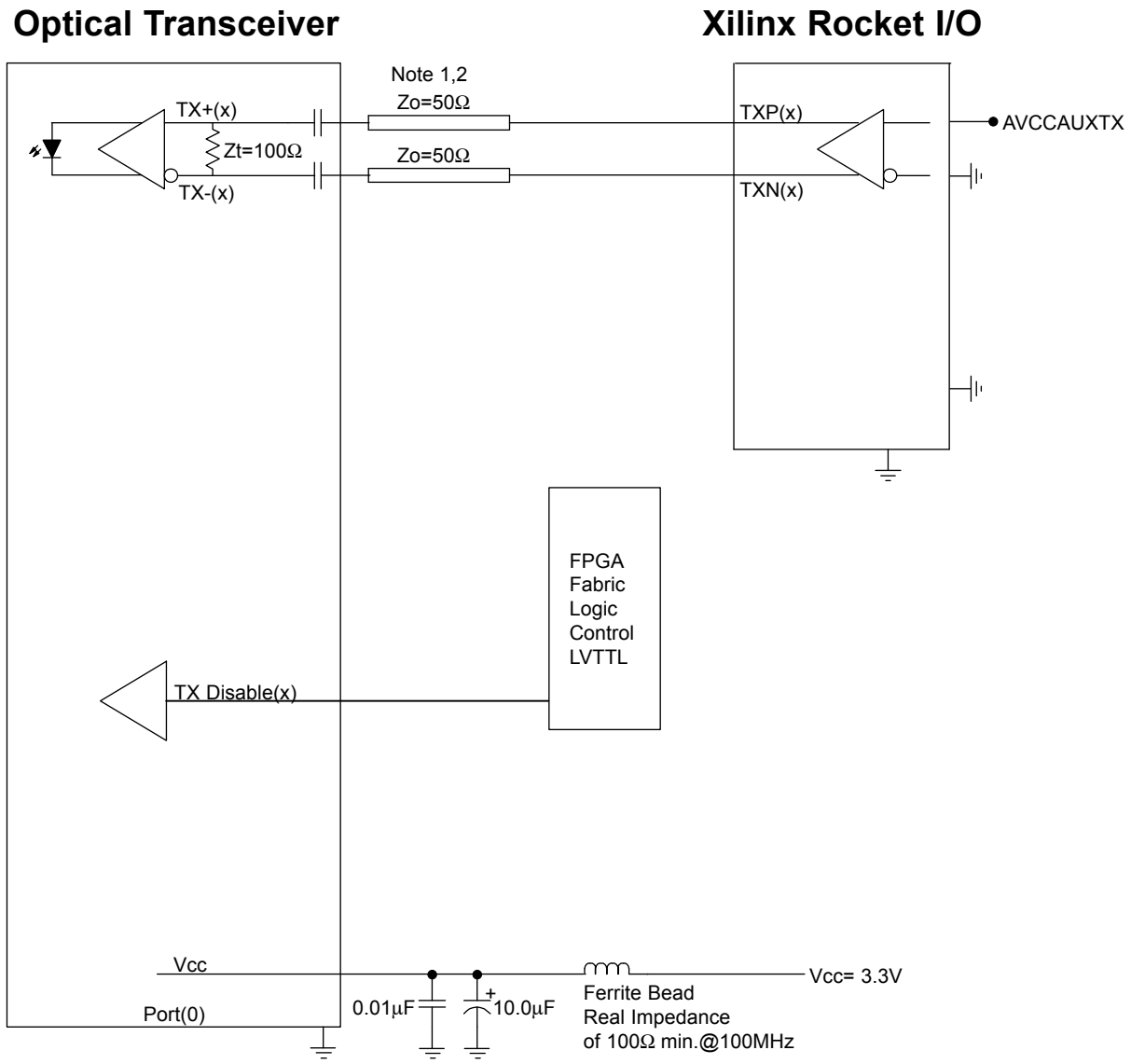

Typical application schematic shown
For alternate applications or termination techniques, please consult the Factory

Note: 1
When using controlled impedance cable (Coaxial cable) and Pre_Emphisis, lengths of 1.0meter are obtainable.

Note: 2
50 Ohm impedance termination shown.
For alternate impedance requirements, please consult the Factory.

All Protokraft statements, technical information and recommendations related to the products herein are based upon information believed to be reliable or accurate. However, the accuracy or completeness thereof is not guaranteed, and Protokraft assumes no responsibillity for any inaccuracies. The user assumes all risks and liability whatsoever in connection with the use of a product or its application. Protokraft reserves the right to change at any time, without prior or subsequent notice, the design, specifications, function, fit or form of its products described herein, including withdrawal at any time of a product offered for sale herein. Protokraft makes no representations that the products herein are free from any intellectual property claims of others. Protokraft and the Protokraft logo are trademarks of Protokraft, LLC. Other trademarks are the property of their respective holders. Contact Protokraft for prices and availability. For the most recent version of this data sheet, please go to the Protokraft website at http://www.protokraft.com. In case of discrepancy, the web version takes precedence over any printed literature. ©2004 Protokraft, LLC. All rights reserved.

4545 West Stone Drive, Kingsport, TN 37660 ☎+1.423.578.7200 🖷+1.423.578.7201 ✉info1@protokraft.com 🏠http://www.protokraft.com

APPENDIX A1

MIL-DTL-38999 FIBER OPTIC CABLE PLUG / MIL-T-29504 PIN TERMINI

*See DSCC or SAE QPL for Approved Suppliers
http://www.dscc.dla.mil/programs/qmlqpl/QPLdetail.asp?QPL=38999

*D38999 PLUG - PIN INSERT

MIL-DTL-38999 CABLE PLUG	
MS PLUG P/N	*D38999/26MH21PN

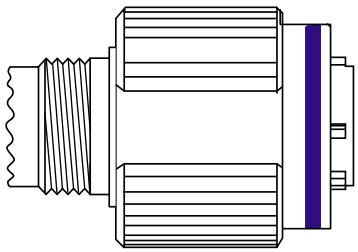

*CABLE PROTECTION CAP

D38999/32 PLUG PROTECTION CAP	
MS PLUG CAP P/N	*D38999/32M23N

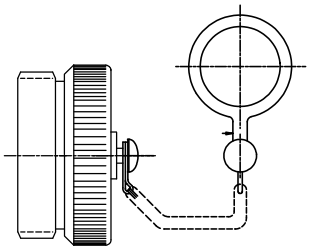

*CABLE BACKSHELL

MIL-C-85049 CABLE BACKSHELL	
MS BACKSHELL P/N	*MS85049/xxxxxx**

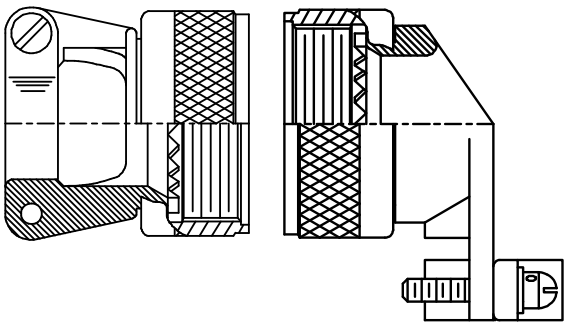

**Straight or angled backshell - defined by application / mounting configuration

*FIBER OPTIC PIN TERMINUS

MIL-T-29504 PIN TERMINUS	
MS PIN TERMINUS P/N	*M29504/04-xxxx**

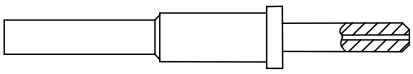

**defined by fiber optic cable configuration

D38999 PLUG PORT ASSIGNMENTS

PORT	PIN	PORT	PIN
0	L	4	X
1	J	5	A
2	G	6	E
3	N	7	C

TOP
Optical Cable Plug Interface

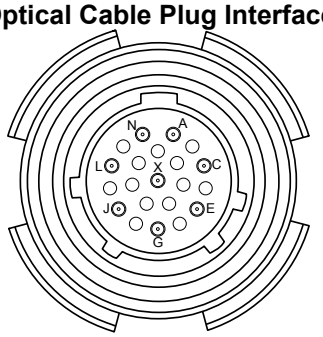

Front face of the optical cable plug pin insert shown. Transceiver insert opposite.

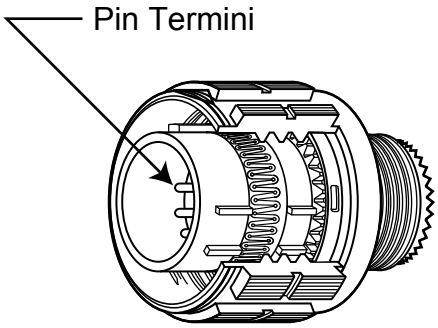

4545 West Stone Drive, Kingsport, TN 37660 ☎+1.423.578.7200 🖷+1.423.578.7201 ✉info1@protokraft.com 🏠http://www.protokraft.com

Octal Port Lightning Series MIL-DTL-38999 Optical Transmitters
50Mbps to 3.2Gbps ARINC 818 & sFPDP Applications, Multimode, 850nM VCSELs

APPENDIX A2

PART NUMBER OPTIONS

Octal Port Transmitters / Receivers, VCSEL

P38 x - 8 x 1 x - H x x - L

Shell Configuration
P38= 38999 Receptacle

Shell Configuration
F = Square Flange
J = Jam Nut

 # Channels (TX+RX)
8= 8TX or 8RX

Functions
T= TX
R= RX

Cable Mode
1= Multimode

Fiber Optic Interface
D = 50Mbps - 2.49Gbps
E = 2.5Gbps-3.2Gbps

Shell Size Code
H = 23 - 21

Shell Plating
F = NI
W = OD CD / NI
Z = ZN - NI

Polarization
(leave blank) _ = N
A = A
B = B
C = C
D = D

Electrical Interface
L = Ribbon Coax to Samtec EQCD Series - Cable Length TBD

Other wavelength,mounting and port count options are available.
Please consult the Protokraft website for alternate configurations.

4545 West Stone Drive, Kingsport, TN 37660 ☎+1.423.578.7200 🖷+1.423.578.7201 ✉info1@protokraft.com 🏠http://www.protokraft.com