# Razor Series

## PCB Mounted Optical Transceiver, GbE, 1x/2x/4xFC & sFPDP Applications, Multimode, 850nM

### Duplex Optical Transceiver Unit

**One TX & One RX Channel Operating from 125Mbps to 5.0Gbps**

## FEATURES

- Compliant with Gigabit Ethernet - IEEE-802.3:2005 and 1x/2x/4xFC - ANSI Fibre Channel FC-PI-2, FC-PI and FC-PH-2
- Optical fiber link distances up to 550 Meters (50/125µ 500MHz*Km MMF)
- Maximum optical channel bit error rate less than $1x10^{-12}$
- Operating temperature range from -40°C to +85°C
- Nickel plated brass shell meets stringent corrosion performance requirements
- Die cast housings are strong, durable and light weight
- Duplex LC compliant optical fiber connector interface
- Threaded PCB retention features provide secure mounting in high shock and vibration environments

## APPLICATIONS

Razor series printed circuit board mounted optical transceivers enable high speed network communications over long distances in harsh environments.

- Gigabit Ethernet switches and peripherals
- Fibre Channel switches and peripherals
- sFPDP data links
- Video displays

The multimode optical fiber interface supports applications where copper cable link distance, bandwidth, weight or bulk make the use of twisted pair, twinax or quadrax copper conductors unacceptable.

## DESCRIPTION

Razor series optical fiber transceivers consist of optoelectronic transmitter and receiver functions integrated into a printed circuit board mounted Duplex LC compliant receptacle connector. The optical transmitters are 850nm VCSEL lasers. The transmitter input lines are driven with differential CML signals applied to the transmitter (TX+ and TX-) lines. Dual loop, temperature compensated, VCSEL drivers convert the transmitter input signals to suitable VCSEL bias and modulation currents.

Outputs from the receivers consist of differential CML data signals on the receiver (RX+ and RX-) lines. An LVTTL signal is generated on the SD line upon receipt of a valid incoming optical signal. The receiver data lines are squelched upon SD deassertion, preventing errant data generation when an invalid incoming optical signal is presented to the transceiver.

The electrical interface to the Razor optical transceivers is a solder pin header with a 10 position SMT / PCB footprint compatible with the industry standard mounting requirements.

## ORDERING INFORMATION

| Application | Part Number |
|---|---|
| Transceiver @ 0.125 - 5.0Gbps | R25N-2S1G |

MOOG PROTOKRAFT



4545 West Stone Drive, Kingsport, TN 37660 USA PH: +1.423.578.7200 FX: +1.423.578.7201 EM: infoMP@moog.com Web: www.protokraft.com

Razor Series SMT / PCB mounted Optical Transceiver,
Fast or GbE, 1x/2x/4xFC or sFPDP Applications, Multimode, 850nM VCSELs

## ABSOLUTE MAXIMUM RATINGS

Absolute maximum limits mean that no catastrophic damage will occur if the product is subjected to these ratings for short periods, provided each limiting parameter is in isolation and all other parameters have values within the performance specification. It should not be assumed that limiting values of more than one parameter can be applied to the product at the same time.

| Parameter | Symbol | Minimum | Typical | Maximum | Unit |
|---|---|---|---|---|---|
| Storage Temperature | $T_S$ | -55 | | +100 | °C |
| Supply Voltage | $V_{CC}$ | -0.5 | | +4.5 | V |
| TX_DIS Input Voltage | $V_I$ | -0.5 | | $V_{CC}$+ 0.5 | V |

## RECOMMENDED OPERATING CONDITIONS

| Parameter | Symbol | Minimum | Typical | Maximum | Unit |
|---|---|---|---|---|---|
| Operating Temperature | $T_A$ | -40 | | +85 | °C |
| Power Supply Voltage | $V_{CC}$ | +3.135 | | +3.465 | V |
| Power Supply Noise (p-p) | $N_P$ | | | 200 | mV |
| TX Differential Input Voltage (p-p) | $V_D$ | 0.25 | | 2.2 | V |

## ENVIRONMENTAL OPERATING CONDITIONS

| Requirement | Feature | Condition | Notes |
|---|---|---|---|
| RTCA / D0-160E | ESD | HBM | 2200V |
| RTCA / D0-160E | Damp Heat | 10 Cycles | 24 Hours |
| EIA-455-25 | Mating Durability | 500 Cycles | <0.5dB Change |
| FDA / CDRH / IEC-825-1 | Eye Safety | Class 1 | No Safety Interlocks Required |

## MATERIALS

| Item | Detail | Notes |
|---|---|---|
| Razor Shell | Nickel Plated Brass | |
| Razor Body | Zamak 5 | |
| Solder Pins | Brass | |
| Solder Pin Plating | Gold over Nickel | |
| Alignment Sleeves | Composite Polymer | |
| Printed Circuits | Polyimide / FR-4 | |
| PCB Conformal Coating | Type AR | MIL-I-46058 |
| Threaded Mounting Posts | Stainless Steel | |



4545 West Stone Drive, Kingsport, TN 37660 USA PH: +1.423.578.7200 FX: +1.423.578.7201 EM: infoMP@moog.com Web: www.protokraft.com

Razor Series SMT / PCB mounted Optical Transceiver,
Fast or GbE, 1x/2x/4xFC or sFPDP Applications, Multimode, 850nM VCSELs

## OPTICAL TRANSMITTERS $T_A$ = Operating Temperature Range, $V_{CC}$ = 3.135V to 3.465V

| Parameter | Symbol | Minimum | Typical | Maximum | Unit |
|---|---|---|---|---|---|
| Optical Output Power (BER<$10^{-12}$) | $P_o$ | -9.5 | | -1.0 | dBm |
| Optical Output Wavelength | $\lambda_{OUT}$ | 830 | 850 | 860 | nM |
| Spectral Width | $\Delta\lambda_{RMS}$ | | | 0.85 | nM |

## OPTICAL RECEIVERS $T_A$ = Operating Temperature Range, $V_{CC}$ = 3.135V to 3.465V

| Parameter | Symbol | Minimum | Typical | Maximum | Unit |
|---|---|---|---|---|---|
| Optical Sensitivity (BER<$10^{-12}$, ER=9.0)<br>125Mbps to 1.25Gbps<br>2.125Gbps<br>2.5Gbps to 3.19Gbps<br>3.2 to 5.0Gbps | $P_I$ | <br>-17.0<br>-15.0<br>-15.0<br>-14.0 | | 0.0 | dBm |
| Optical Wavelength | $\lambda_{IN}$ | 830 | | 860 | nM |

## POWER SUPPLY CURRENT $T_A$ = Operating Temperature Range, $V_{CC}$ = 3.135V to 3.465V

| Parameter | Symbol | Minimum | Typical | Maximum | Unit |
|---|---|---|---|---|---|
| Supply Current per Port | $I_{CCT}$ | | 175 | 250 | mA |

## OPTICAL LINK DISTANCES

| Protocol | 62.5/125µ<br>200MHz*Km | 50/125µ<br>500MHz*Km |
|---|---|---|
| 4xFibre Channel - ANSI X3.297 FC-PI-2 | 75M | 150M |
| 2xFibre Channel - ANSI X3.297 FC-PI | 150M | 300M |
| Gigabit Ethernet - IEEE-802.3:2005 | 275M | 550M |
| 1xFibre Channel - ANSI X3.297 FC-PH-2 | 300M | 500M |

Aqueous washing is permitted with the protective covers in place over the optical interface.
If necessary, after washing, clean the optical barrels with lint free swabs and Isopropyl alcohol
The transceivers are conformally coated but after aqueous washing the units should be baked @ 85°C for 1.0 hour to eliminate any retained moisture.



4545 West Stone Drive, Kingsport, TN 37660 USA PH: +1.423.578.7200 FX: +1.423.578.7201 EM: infoMP@moog.com Web: www.protokraft.com

Razor Series SMT / PCB mounted Optical Transceiver,
Fast or GbE, 1x/2x/4xFC or sFPDP Applications, Multimode, 850nM VCSELs

## OUTLINE DRAWING

Dimensions are shown as: inches [mm]

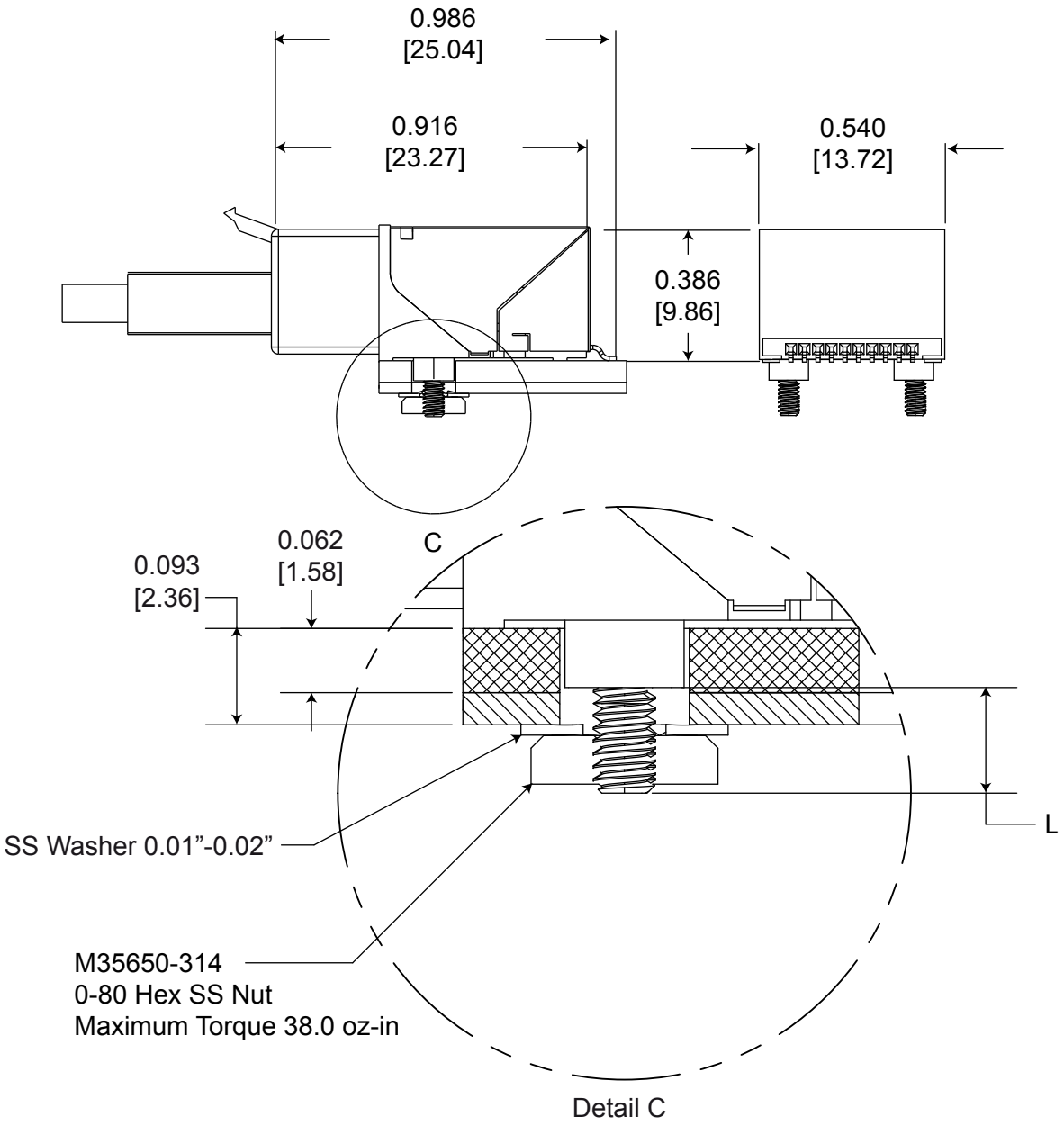


## Threaded Stud Length Options

| L | ITEM # |
|---|---|
| 0.102 [2.6] | R25N-2S1G |
| 0.166 [4.2] | R25P-2S1G |



4545 West Stone Drive, Kingsport, TN 37660 USA PH: +1.423.578.7200 FX: +1.423.578.7201 EM: infoMP@moog.com Web: www.protokraft.com

Razor Series SMT / PCB mounted Optical Transceiver,
Fast or GbE, 1x/2x/4xFC or sFPDP Applications, Multimode, 850nM VCSELs

## PRINTED CIRCUIT BOARD FOOTPRINT

Razor Duplex Optical Transceiver
Dimensions are shown as: inches (mm)

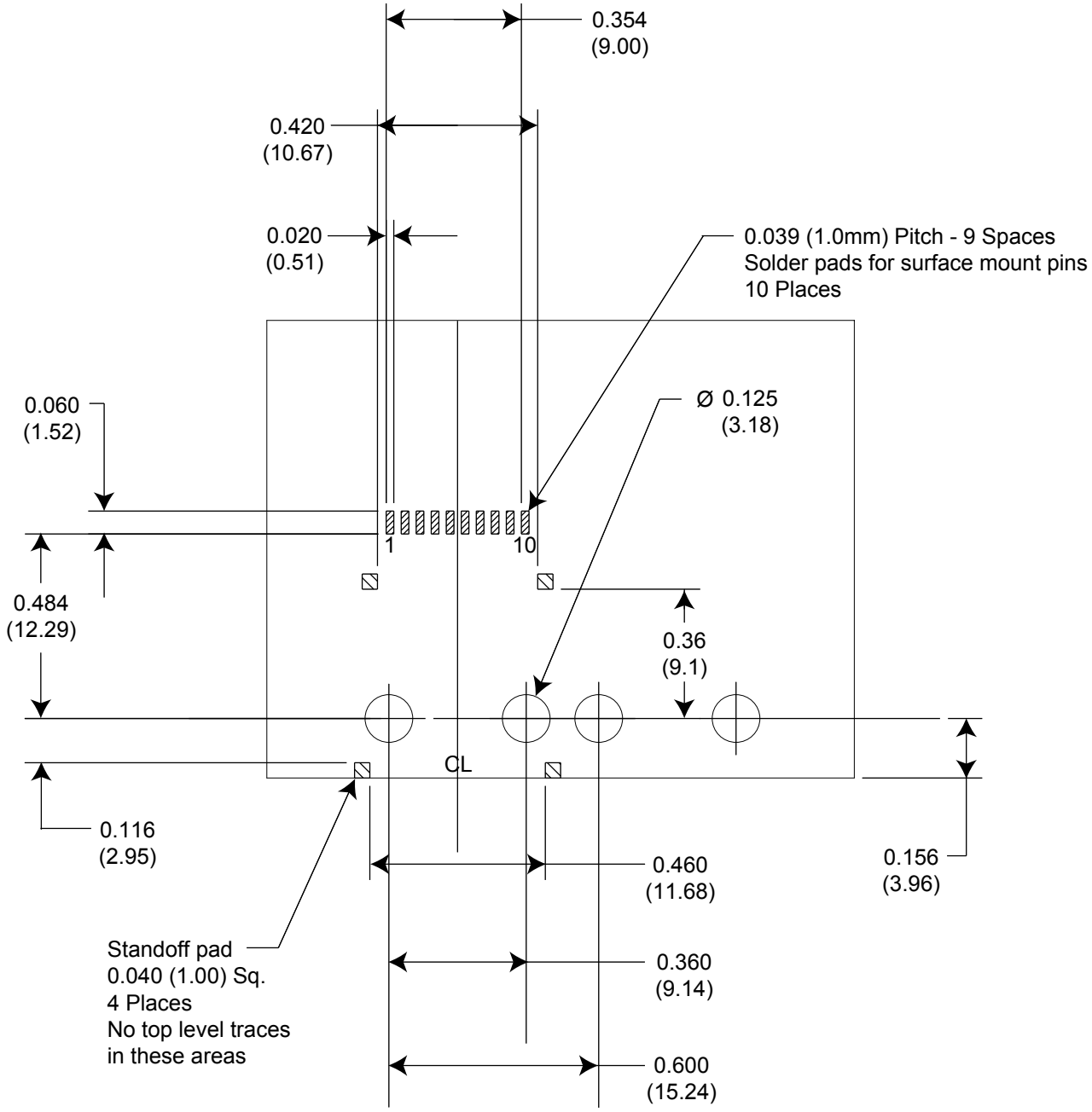


Top View Shown



4545 West Stone Drive, Kingsport, TN 37660 USA PH: +1.423.578.7200 FX: +1.423.578.7201 EM: infoMP@moog.com Web: www.protokraft.com

Razor Series SMT / PCB mounted Optical Transceiver,
Fast or GbE, 1x/2x/4xFC or sFPDP Applications, Multimode, 850nM VCSELs

## ELECTRICAL PIN ASSIGNMENTS

Razor Duplex Optical Transceiver
Component Bottom View Indicated

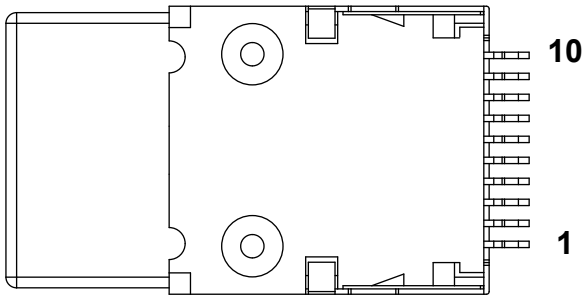


| Pin Number | Symbol | Description | Logic Family |
|---|---|---|---|
| 1 | TX+ | Transmitter Data - Input | CML<br>Internal 100Ω differential termination |
| 2 | GND | Ground | N/A |
| 3 | TX- | Transmitter Data - Input | CML<br>Internal 100Ω differential termination |
| 4 | $V_{CC}$ | Power Supply - Input | N/A |
| 5 | SD | Signal Detect - Output<br>Satisfactory Optical Input: Logic “1” Output<br>Fault Condition: Logic “0” Output | LVTTL |
| 6 | TX Dis | Transmit Disable - Input<br>Logic 1: Disable Optical Output<br>Logic 0: Enable Optical Output | CMOS<br>Internal 4.7KΩ pulldown |
| 7 | RX+ | Receiver Data - Output | CML |
| 8 | $V_{CC}$ | Power Supply - Input | N/A |
| 9 | RX- | Receiver Data - Output | CML |
| 10 | GND | Ground | N/A |

## INSERT ARRANGEMENT

Razor Duplex Optical Transceiver
Optical interface of the transceiver interface shown
Mating cable plug interface opposite

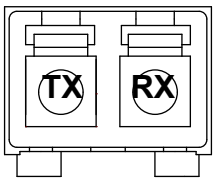




4545 West Stone Drive, Kingsport, TN 37660 USA PH: +1.423.578.7200 FX: +1.423.578.7201 EM: infoMP@moog.com Web: www.protokraft.com

Razor Series SMT / PCB mounted Optical Transceiver,
Fast or GbE, 1x/2x/4xFC or sFPDP Applications, Multimode, 850nM VCSELs

## APPLICATION SCHEMATIC

For Xilinx Rocket I/O Interfaces

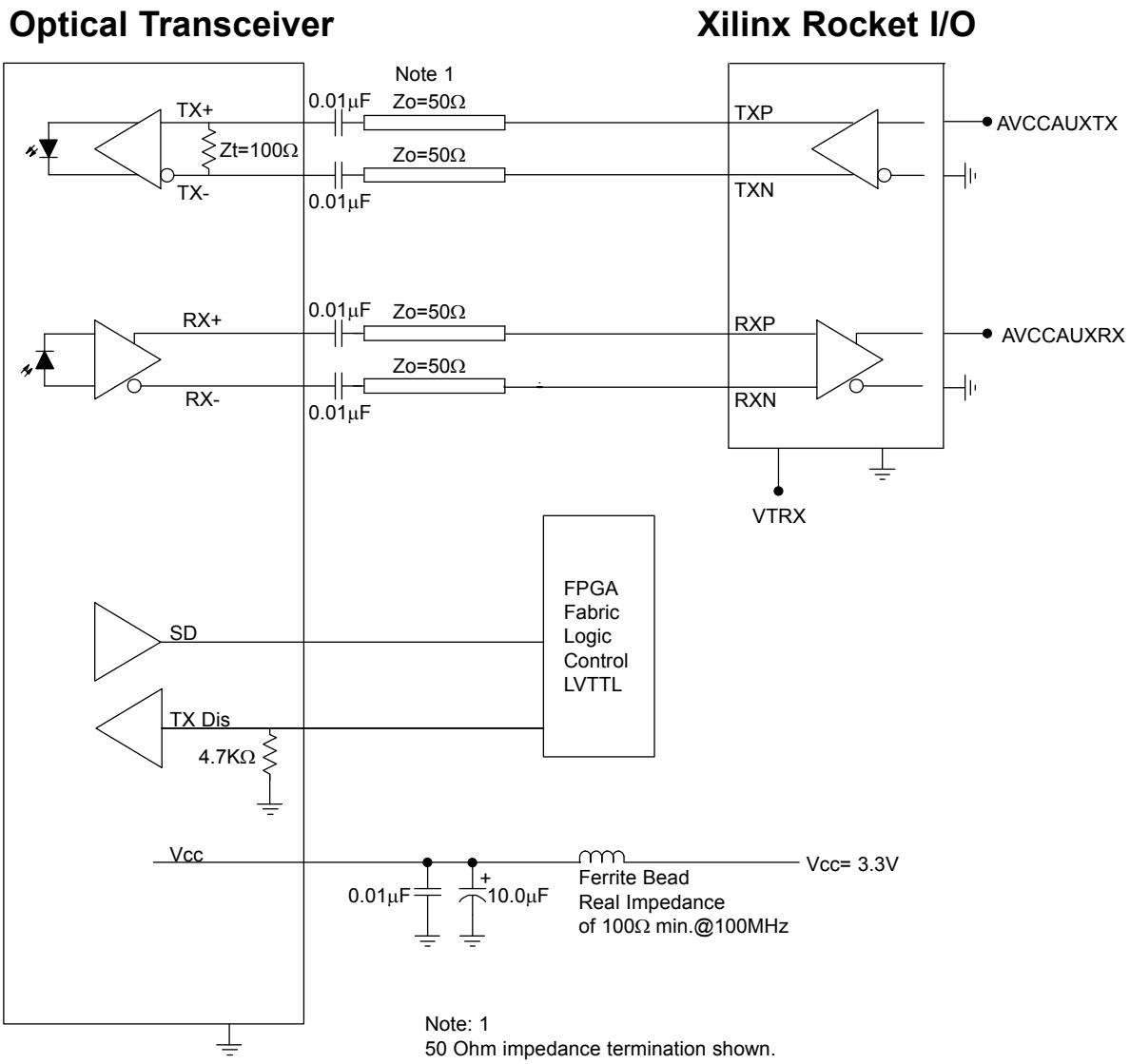


Typical application schematic shown
For alternate applications or termination techniques, please consult the Factory

Note: 1
50 Ohm impedance termination shown.
For alternate impedance requirements, please consult the Factory.

All Protokraft statements, technical information and recommendations related to the products herein are based upon information believed to be reliable or accurate. However, the accuracy or completeness thereof is not guaranteed, and Protokraft assumes no responsibility for any inaccuracies. The user assumes all risks and liability whatsoever in connection with the use of a product or its application. Protokraft reserves the right to change at any time, without prior or subsequent notice, the design, specifications, function, fit or form of its products described herein, including withdrawal at any time of a product offered for sale herein. Protokraft makes no representations that the products herein are free from any intellectual property claims of others. Protokraft and the Protokraft logo are trademarks of Protokraft, LLC. Other trademarks are the property of their respective holders. Contact Protokraft for prices and availability. For the most recent version of this data sheet, please go to the Protokraft website at http://www.protokraft.com. In case of discrepancy, the web version takes precedence over any printed literature. ©2004 Protokraft, LLC. All rights reserved.



4545 West Stone Drive, Kingsport, TN 37660 USA PH: +1.423.578.7200 FX: +1.423.578.7201 EM: infoMP@moog.com Web: www.protokraft.com